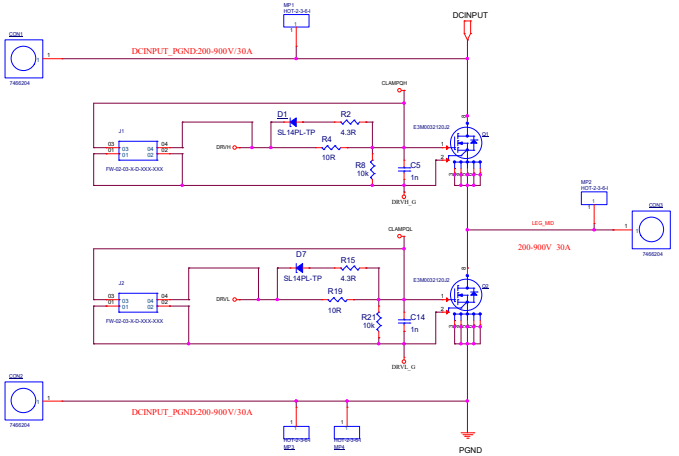

Wolfspeed

PCB Ver.: 01

BOM Ver.: A

Prepared By:
Sandia Wong

Approved By:
Lupel Ma

Title	CRD22DD12N-J2_22KW_BI-OBC_DCDC_HBIMS	
Size: A1	Document Number: P/N: CRD22DD12N-J2	Rev: 0v1
Date: Friday, January 05, 2024	Sheet 1 of 1	