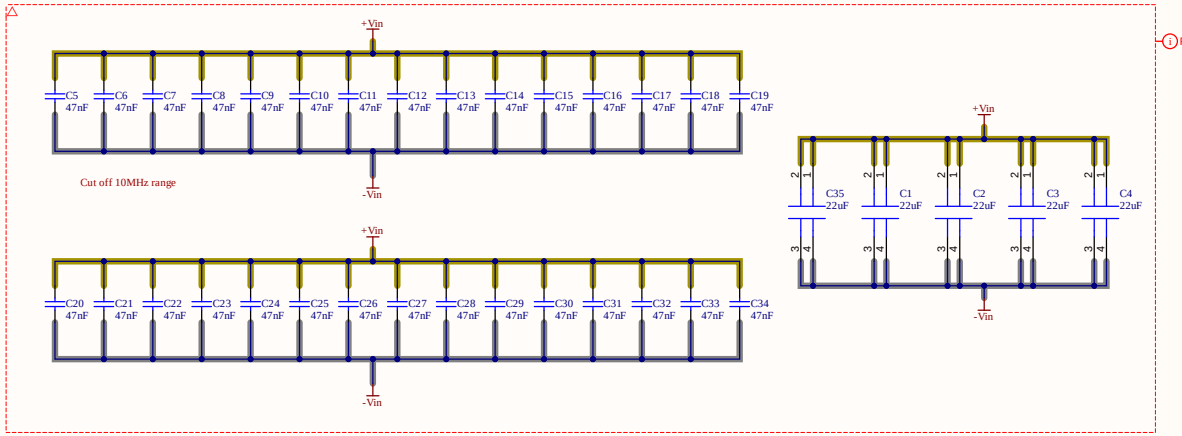

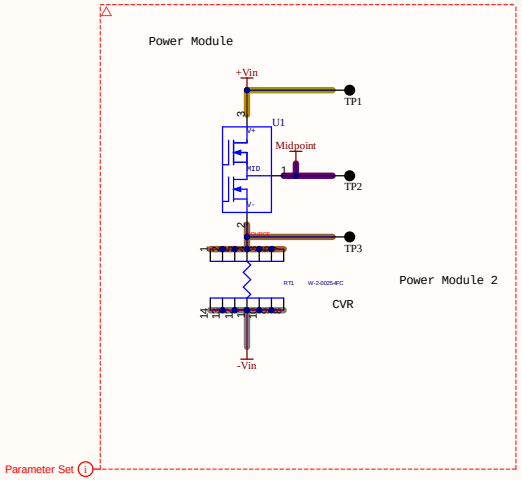

Safety Bleeder Resistors for Cap Bank

High-Voltage Input

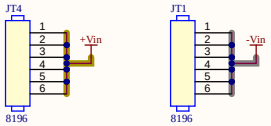

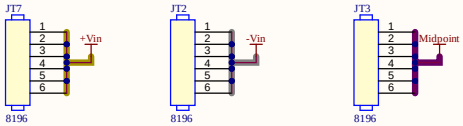

Inductor Relay Inputs

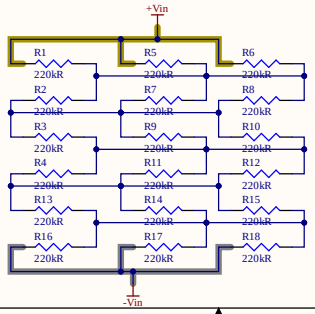

Title: KIT-CRD-CIL17N-BM_Main.SchDoc			
Size: ANSI-B	P/N: KIT-CRD-CIL12N-BM3		
Date: 8/31/2022	Time: 11:43:40 AM	Sheet: 1 of 1	
File: KIT-CRD-CIL17N-BM_Main.SchDoc	Project Name: KIT-CRD-CIL17N-BM.PrjPcb		Revision: 01

Wolfspeed

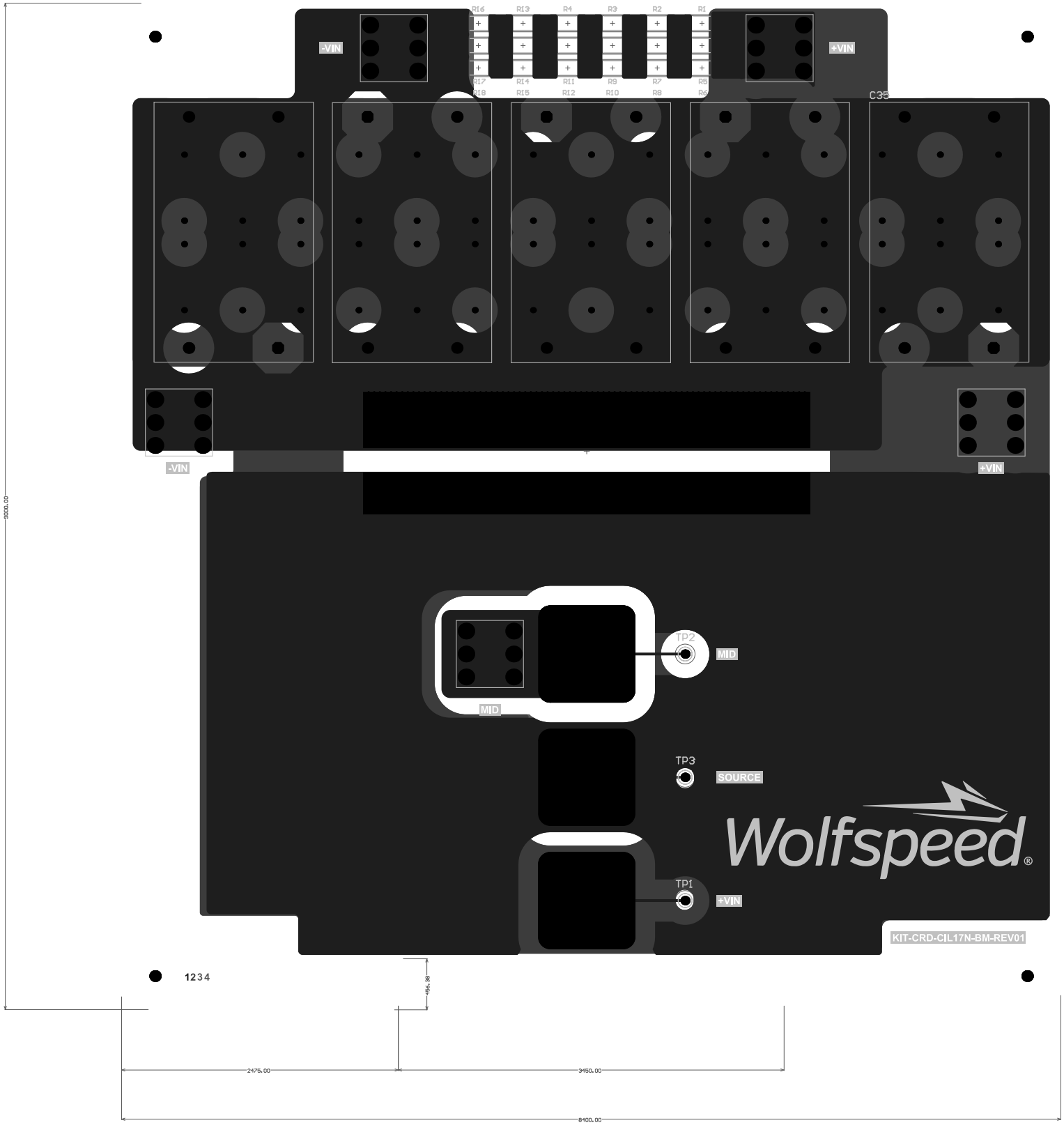
-VIN
+VIN
R16
R13
R4
R3
R2
R1
R17
R14
R11
R9
R7
R5
R18
R15
R12
R10
R8
R6
C35
-VIN
+VIN
TP2
MID
MID
TP3
SOURCE
Wolfspeed®
TP1
+VIN
KIT-CRD-CIL17N-BM-REV01
1234
9000.00
156.38
2475.00
3450.00
8400.00

Board Stack Report